Feb 91

Scope

W6NWG

Palomar Amateur Radio Club Inc.

POST OFFICE BOX 1603, VISTA, CALIFORNIA 92085-0530

W6NWG/R 146.730(-) W6NWG/R 449.425(-) W6NWG/R 145.050(Pkt)
KA6AUI/R 147.130(+)(Patch)(107.2) WA6IPD/R 146.175(+)(Patch)(107.2) WD6HFR/R 224.90(-)

V O L X X V I, N O. 2 F E B R U A R Y 1 9 3 6 to F E B R U A R Y 1 9 9 0

President :	Stan Rohrer	W 9 F Q N	Valley Center	749-0276
Vice Pres :	Jack Hanthorn	K I 6 J M	Vista	598-0420
Secretary :	Nash Williams	W 6 H C D	Bonsall	728-3574
Trea$urer :	Ron Wilhelmy	W I 6 B	Rancho $anta Fe	756-3133
Editor :	Stan Rohrer(temp)	W 9 F Q N	Valley Center	749-0276
Membership:	Jo Ashley	K B 6 N M K	Escondido	741-2560

F E B R U A R Y 6th meeting(1st Wed) is at Lincoln Middle School Cafeteria in Vista. I-5 or I-15 to Rd.78, Escondido Ave(Sunset) ramp, north on Esc.Ave, after 2nd light between Eucalyptus and E.Vista Way. Talk in .730.

What you should know:

H A M C A L E N D A R

Feb 6 Wed - PARC Club Meeting
Feb 9 Sat - PARC VE Test, AA6OM
Feb 14 Thu - PARC Club ExecMtg
Feb 14 Thu - Valentine's Day
Feb 16 Sat - EARS DFing,ck 146.88
Feb 16-17 - ARRL Int.DX Cont. CW
Feb 22 Wed - Deadline for SCOPE
Mar 2-3 - ARRL Int.DX Cont.SSB
Mar 30-31 - CQ WW WPX ContestSSB
May 25-26 - CQ WW WPX Contest CW
(Send calendar items to W9FQN)

C O N T E N T S

Code, Experts, Exec. Meeting .. 2
Pres. Msg., Special Recognition 3
W6BL(SK), Ads, Repeaters 4
Autopatches 5
Autopatches, FORSAIL 6
Membership, VE test, Gen News . 7
Ads, Nets 8
Potpourri 9
TS-32 diagram, Ads 10
Ads and Application PARC 11 &.12

N E X T C L U B M E E T I N G

Our next club meeting will be FEBRUARY 6th at 7:30pm in the Lincoln Middle School on Escondido Avenue in Vista. The program will be by one of our club members, Harry Hodges, WA6YOO, who will talk on SSB DXing: Confessions of an Addict. Also where to find and work it. Harry is a North County DXer who has many countries to his credit. Find out what it takes to be a SSB DXer. (for new hams, SSB means voice Single Side Band)

SHOW AND TELL- John-WB6IQS will have his new Alinco dualband HT at the meeting for all to see. Why don't YOU consider bringing something for SHOW and TELL, new HT, portable computer, something homemade, etc. or share some new information with us. Don't forget the FOR SALE TABLE!

L A S T C L U B M E E T I N G

Attending were 72 members and 7 guests who enjoyed the coffee and goodies. Art-KB6YHZ supervised the coffee.

Refreshments

The program consisted of Don Huff-W6JL of Poway giving an excellent talk on AMTOR. Many of our club members are starting to show up at 7pm for eye-ball QSOs before the 7:30 meeting. There is nothing like one-to-one contact for discussions of your amateur radio problems.

W A N T to B E a H A M ?
(or Dial-a-Ham)

If you or a friend are interested in becoming an amateur radio operator or in joining the Palomar Amateur Radio Club, please contact one of the ELMERS listed below for more information:

BONSALL:Nash Williams:W6HCD:728-3574
CARDIFF: Duane Stedman:WB6R:753-4821
CARLSBAD:EleanoreCall:N6QJE:729-0850

ICOM MONTH

We Support Our Troops:

COME HOME SOON!

DEL MAR:GerrySanford:KC6BJM:755-5244
ESCONDIDO: Jo Ashley:KB6NMK:741-2560
ENCINITAS:DaveCopley:WA6HQM:753-2605
FALLBROOK:ArtRideout:WA6IPD:728-6834
La MESA: Roger Jaffe: N6UUW:697-6025
LAKESIDE:Mac McBride:WB6GXR:561-2211
LEUCADIA: Bud Lincoln:KG6VX:436-9983
LinVista:PaulWilliams:KB5MU:571-8585
MIRA MESA: Ron Earl: W6TXK:566-1959
OCEANSIDE:LarryGugle:KC6PEN:439-4109
OCEANSIDE: Lloyd Hunt:W6TFB:757-9374
PAUMA-PALA:Mark Ross:KC6CZO:742-1539
PointLom:MickMcDaniel:W6FGE:222-3912
POWAY:MarkSchlessingerN6NNI:748-8391
RAMONA: Vernon Leming:AA6UU:789-3070
RanchoPen:John Tentor:W6OLQ:672-3891
RanchoS.Fe:RonWilhelmy:WI6B:756-3133
S.D.:Dennis Vernacchia:N6KI:271-6079
SanMARCOS:RustyMassie:AA6OM:747-5872
SanMARCOS:FloydHarvey:W6JSP:741-8391
SolanaBe:LouBroadbent:N6CKQ:755-9179
VALLEYctr:Stan Rohrer:W9FQN:749-0276
VISTA: Jack Hanthorn :KI6JM:598-0420

PARC members: if your area is not represented above and you would like to serve as an ELMER in your area to get someone started in amateur radio, please contact W9FQN. Your responsibility would be to introduce them to PARC and club meetings, Ham Radio Outlet, Radio Shack Ham "starter" packages, etc., and other local amateurs. You would serve as "their" first local Ham contact. You need not serve as their ELMER unless you want to do so. Your main function is to tell them "where to go."

Ron-W6TXK sometimes conducts classes in the MIRA MESA area so contact him for the latest information on the starting of new classes.

POINT LOMA NOVICE INSTRUCTION and TESTING: contact Mick McDaniel, W6FGE and friends, 222-3912.

The club has some code tapes available if beginners find some of the "starter" packages a little too expensive, but they still need a test booklet. We also have some IBM compatible disks of a great code program available at club meetings. If you have a good code program, please make up a disk with it and several other programs for us to get new hams started. The club will exchange disks with you. We need programs for Apple and C-64's. We presently have programs for IBM and Radio Shack Mod III & IV.

One of our members from Fallbrook, Ray-KK6CA, has consented to make up special code tapes for those wanting special types of code practice material. Please bring in your blank cassetts and be prepared to tell Ray what type of practice you want.

For those club members who borrowed code disks from W9FQN or KB5MU, we would like to have you make copies of the disks and return them to us at the next meeting so that we can make the disks available to other members and prospective amateurs. Thanks.

- BK -

5.25" CODE and QUESTION DISKS:

	IBM	C-64	Price
Novice	IBM01	COM01	$14.95
Tech	IBM02	COM02	$14.95
General	IBM03	COM03	$14.95
Advanced	IBM04	COM04	$19.95
Extra	IBM05	COM05	$19.95
Part 97	IBM97	-----	$ 9.95

(+ $2.50 shipping)
73 Magazine, Forest Rd, Hancock, NH 03449.

These disks contain code programs and include updated FCC questions, multiple choice answers, formulas, schematic symbols, diagrams, and simulated VE sample tests.

C O N S U L T I N G E X P E R T S
(found on 146.730)

W9FQN : Mexican license; Nicads
WD6FWE: C-64 computers > Commodore
WA6HQM: 10 meter 10-10 Club Infor
WB6IQS: Heathkit; Motorola; Rpters
N6KI : Swapmeets; Used Equip. $$
W6INI : ARRL; ARES; Fire Patrols
N6IZW : Microwave; Test Equipment
KB6MCU: Interference; Filters; ATV
KB5MU : Pkt; Satellite; Computers
KB6NMK: Direction Finding Info.
W6OLQ : Ping Pong; Badges; HP Plot
AA6OM : VE Testing: Tests/Helpers
KC6PEN: Ham Help NetThur.Eve;Tubes
KI6RF : Mobile noise filtering
N6TEP : U.S. Coast Guard Auxiliary
AA6TR : Sailing / Boating Antennas
N6UUW : Radio Controlled Airplanes
N6RVO : National Traffic System
WQ6V : Cable TV problems; Coins
ND6W : Test Equipment,Programming

Check ad sections for professional help on radio repair: N6GZI, KC6PEN, and HRO. If you would like to have your call added to the list, contact W9FQN with your speciality area.

E X E C U T I V E M E E T I N G

The Executive Committee, consisting of the officers of the Club and the Chairmen of its committees, meets at 7:30 p.m. on 2nd Thursday after the club meeting at the home of various of its members. You are welcome to attend these meetings. Contact any executive member for additional information on executive committee meetings. The January meeting was at Benton-KK6LX's QTH and we all enjoyed the cookies.

DISCUSSED: finances, programs, autopatches (4), TASMA & WA6IPD/R, non-members using the repeaters and autopatches, SCOPE costs, future links, phone filters ($200est), etc.

APPROVED: electric stapler ($30est), 450 filters ($250est), new autopatch codes, and cards to be sent to more than "transient" users of PARC repeaters.

IN ATTENDANCE: (officers) Stan-W9FQN, Jack-KI6JM, Nacho-W6HCD, and Benton-KK6LX; (others) Jo-KB6NMK, Erik-KA6UAI, and Steve-N6UIA.

Happy Valentine's Day

LARRY E. GUGLE, KC6PEN (619)439-4109
USMC (Ret.) Buisness Lic.#500021

"STCR - SHOP"

Sarge's Two-way Communications Repair SHOP

25 years communications equipment maintenance experience for the USMC. Specializing in HF & VHF Transceiver and RF power amplifier repairs.

50% OFF labor to PARC members

PARC member. Repairs by appointment

FARMERS INSURANCE GROUP OF COMPANIES

TIM HOY
Agent

Auto • Fire • Life • Commercial

KI6GI

8911 La Mesa Blvd., Suite 103, La Mesa, CA 92041
(619) 466-9770

---------- ADS HELP SUPPORT THE " S C O P E " ----------

de EL P R E S I D E N T E #11

Repeaters sometimes seem like a REAL big part of our club in the last 17 years and while we do not intend to de-emphasize their importance it should be noted that the club has supported a good club program each month, increased support of ARRL Field Day, ARRL Sweepstakes, ARRL 10m SSB/CW, and Amateur Radio Emergency Service (ARES) prepardness (antennas, towers, batteries, training, trailers, etc). We want to be known as a "general purpose club." Amateurs join PARC because they like the club atmosphere and activities, or some join just to use the repeaters - and they never attend meetings. If we don't meet your needs, please let us know what WE can do to improve things for you.

A survey of clubs in the S.D. area indicates that many repeater club memberships run from $15-50 per year (some have initiation fees of $10+) while our general purpose club membership runs $12 per year which includes: a club program, emergency programs, contests, Field Day, Picnic, six repeaters with two autopatches (soon to be four), and of course, THE SCOPE. The club owns the following: property on Palomar Mountain, two trailers (half interest in another), five portable crankup towers, repeater equipment, and assorted small items.

PARC has been able to survive without increasing dues because of the following: SCOPE ads, repeater site rentals, and donations from club members and local businesses. We hope that each and every one of you will invite the amateurs you talk to to join PARC and its club activities. Repeater users need to be especially careful to extend a welcome hand to those frequent users of our repeaters that you talk to each day to help support the repeaters they are using.

73, Stan W 9 F Q N

N E W S L E T T E R H E L P E R S
- December 1990 -

Computer Labels, Bill Whipple N6COU
Ads,Art,Members, Jo Ashley .. KB6NMK
Ad billing $$$, John Tentor . W6OLQ
Folding/Staples, Jack Hanthorn KI6JM
Folding/Staples, Lloyd Hunt .. W6TFB
Folding/Staples, Bill Whipple N6COU
Lables/Sorting, BentonCaldwell KK6LX
Mail/ZIP/Forms, Stan Rohrer . W9FQN

Without these people life would certainly be difficult (de W9FQN).

S P E C I A L
R E C O G N I T I O N OF =>

❤ Betty Mahoney-KB6DGR, within days of selling her QTH, will be moving to the midwest to be nearer her family. Betty has been a loyal member of the 8pm 146.730 San Diego County Traffic Net (SDCTN) system for years and has been a great help to me (W9FQN) in seeing to it that what is being sent on the Friday evening code net is what I say it is. She was also responsible for pushing PARC into changing the 146.05 digi over to NET/ROM NODE operation this month. Thanks, Betty, we hope to hear from you from time to time and we wish you the best at your new QTH. You will be missed!

- BK -

Bill Smith-KB6MCU, PARC club member, is the SANDARC interference chairman and he has been running all over San Diego Co. working on interference complaints against amateurs. His last complaint was against a club member in Vista, R.F. Krist-W6KTE, where the complaint was TV and phones. Bill lives in San Diego and has been donating his time, gas, and filters to the cause of resolving these complaints against amateurs.

Stan-W9FQN worked on a previous complaint against W6KTE. W6KTE's station appears clean except for an unsoldered coax connector.

Bill indicates a pattern is forming in more than 50% of the complaints: operation on 20m, tower 50'+ high, 1,000 watts, SSB, unsoldered coax connectors, new housing development where they were the first ones to build, and retired.

PERSONAL

- BK -

❤ Received a nice Christmas card from Eleanore-N6QJE addressed to PARC wishing all of her friends "happiness during the holidays and throughout the new year" and thanking all of you "who helped me so much during my LIMITATION from the accident."

- BK -

RECEIVED nice note(s) from: Joseph Silveira-WA1CSO, Larry-KC6PRH who wants to thank Eleanore-N6QJE for the "Elmer's" information, and a nice letter from William Driml-W6NAT who had the following to say --> Ralph & Gang, greetings de Caldwell, Idaho, where the temp is around zero most of the time .. having great time but can't get outside .. ground frozen 3' down .. beams and twrs laying on ground .. 20m inverted V up 25' .. work some DX .. hi to Jack-KI6JM, Bob-WA6QQQ, Ralph-K6HAV, and rest of OTs in Vista .. HF skeds with A7-A6 and ETs .. maybe I can stop the war over there (Bill was a past president of PARC).

- BK -

Larry-W6QCA and Mark-AA6TR for hosting the Sunday morning Sailor's Session (SSS) at 10am. It is a good opportunity to exchange boating information for San Diego County sailors and the nets have been very interesting. They now have in excess of 12 boaters that periodically check into this net with boat lengths running from 23' to 52'.

- BK -

Karl-N6WLX and Chuck-N6TJT for putting up a 10m dipole for Eleanore-N6QJE so she can work DX - and latest reports are having her working the Pacific and Europe.

- BK -

Ed Carry-K6ICG for the donation of a 35' free standing tower with winch which will be used for Field Day or at the repeater site for emergency repeater antenna use. Wally-N6JZB and Dennis-N6KI did the honors of taking everything down and Stan-W9FQN will move it from N6KI's QTH to Valley Center for painting.

- BK -

❤ Bernice-N6WQR for her recent activity on the evening traffic net representing San Luis Rey and helping with the Escondido Christmas parade. Its good to see that your rigs are starting to work FB (Fine Business, gud(good)) now.

(- Dahdidididadidah -)

Nash-W6HCD for articals on earthquakes. It appears as though the Rose Canyon fault has been upgraded to active and could get a hit of 6.8. More on this later.

++++++++++++++ SK ++++++++++++++++

+ B I L L W I L L I A M S +

+ - W 6 B L L - +

+ Bill, a long time member of +

+ PARC passed away the week before +

+ Chrismas. He will be missed by +

+ all those who knew him. +

++++++++++++++ SK ++++++++++++++++

Call me to buy or sell real estate in the north S.D. county inland area.

KB6NMK
JO ASHLEY
REALTOR®
Office: 619-489-1891
Home: 619-741-2560

MLS

ERA® HOMES, LAND & INCOME
260A W. CREST ST. • ESCONDIDO, CA 92025
Each office independently owned and operated ERA® REAL ESTATE

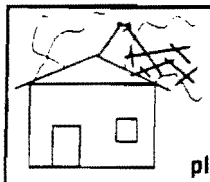

If your antenna system looks like these and you want it repaired, replaced or removed, please call for a free estimate!

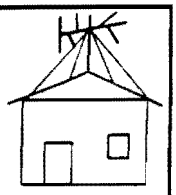

Antenna Specialties

T.V., Cable & Radio Antenna Systems
Installation, Repair & Removal
Interference Resolution

542-1405
N6GZI
Edward Ross

---------- ADS HELP SUPPORT THE " S C O P E " ----------

R E P E A T E R S, etc.

TECHNICAL: John Kuivinen.....WB6IQS

- - TRUSTEES - -

W6NWG/R: Ron Wilhelmy ...WI6B->
145.05(s)pkt,146.730(-),449.425(-)

KA6UAI/R: Erik Thompson, 147.130(+)

WA6IPD/R: Art Rideout, 146.175(+)

WD6HFR/R: Ron Berger-NE6T,224.900(-)

All CTCSS(PL) tones are 107.2

We have noticed a very few of our members and some of our guests on the repeaters using 4-letter words in their conversation. The club does not approve of 4-letter words being used on the repeaters so we suggest that if anyone does use language that is not appropriate that you not come back to them or end your QSO immediately. Please do not talk to anyone using bad language or participate in any improper conversations or operations. If in doubt, don't do it. To participate in these conversaitions could be signaling your approval of what is being done or said. It is not your job to be a policeman but don't condone it by being a part of the conversation. We really don't have a problem with just a few isolated cases but these

things sometime snowball if they are not stopped immediately. We would like to be noted as operating "family" repeaters. We have a large influx of new members and new hams and we need to set a good example for them.

- BK -

If you originate a call to 911 through a base station, then it is your duty to stick around until the call is completed by the base station to the police. Many times the police ask questions which the base station caller cannot answer and additional information might be needed from you. The base station should probably remind the mobile to "stick around" until the call is completed.

- BK -

WORKPARTY (01-13-91): Paul-KB5MU and Stan-W9FQN made a mad dash to the repeater site to install the new 1.3 NET/ROM NODE chip in the MFJ-1270 packet controller. Paul installed the new chip, and specified the new paramaters while Stan worked in the battery shed checking charging currents, voltages and the leaky cell which seemed to have lost no acid since the last visit. In fact we had a higher liquid level than when we left last time! Anyone know why? The NODE now goes by the name of W6NWG-1 or PALMAR (the "o" is missing). The suggestion of PALMAR came from Betty-KB6DGR or Jo-KB6NMK. We also bought a second chip, W6NWG-2, for another project.

At present PARC is "sitting" on 6m, 2m, 450, and 900MHz FM equipment. If any of you have any ideas on the use of this equipment, please contact a club officer.

NET/ROM NODE COMMANDS:

To display a list of known destination nodes, use NODES.

To display nodes including hidden nodes, use NODES*

To display specific routing information for a particular node, use NODES followed by the callsign or identifier of the node in question (NODES ???). Your answer will be a list of routes with the quality of the route (255 best and 0 worst). ">" designates the route in use.

For example, suppose you want to connect to the WORLI bulletin board in Santa Cruz (near San Francisco). 1st, establish an uplink, CONNECT PALMAR. 2nd, ask PALMAR for list of NET/ROM NODES for which it has routing information using NODES command which might, ie, pick up SFO-W6AMT. 3rd, issue CONNECT SFO. 4th, then CONNECT WORLI to get into the bulletin board. 5th, to disconnect, type DISC. You might play around with this and other things and let us know exactly what needs to be said to "get into" interesting places.

If you feel that any of the W6NWG-1 "parameters" need changing, please contact Paul-KB5MU, Stan-W9FQN, or Betty-KB6DGR.

- BK -

REPEATER RULE#3: Those who use the repeaters the most have never seen or worked at repeater site.

- BK -

Our repeaters in the PARC bunker on Palomar Mt. at 5,600' cover 2,000 sq.mi. of S.D.Co. and 140+ miles out to sea. Be FRIENDLY to those that you talk to and INVITE them to support the club with their membership. You can check their membership in PARC by asking them if they have seen something in the most recent SCOPE or by looking at the last club roster.

A U T O P A T C H E S

KA6UAI/R: Erik Thompson..#1..KA6UAI
ENCINITAS + surounding towns
KA6UAI/R: Jerry Hauser...#2..WB6FMT
VISTA + surounding towns
WA6IPD/R: Art Rideout...#4..WA6IPD
FALLBROOK + surounding towns

CLUB POLICY: 1)It has always been club policy that the autopatches are ONLY for club members although you can feel free to "dial up" the SECRET patch code for non-members in an emergency, and 2)these repeaters are OPEN repeaters for Club Members and OCCASIONAL TRANSIENT USERS. We feel that if someone uses the repeaters on a somewhat regular basis, that they should support the repeater operation with their membership as suggested by the ARRL Repeater Directory. At present we have about 60 non-club members using 146.73 and 147.13 who are not club members (some former members) and this represents a loss of funds of about $720 which could be used for additional repeater operations.

The value of the club's investment on Palomar Mountain is considerable: property ($30,000); tower, feedlines, and antennas ($5,000); repeaters ($6,000); and building ($2,000) for a total of about $43,000. This figures out to about $130 per member and does not take into account the hundreds of hours of donated work, travel expenses, and electricity that is needed to make everything work properly. Certainly $12 per year (3c/day) is a small amount to pay for such an investment for those who use the repeaters. Some of the NON MEMBERS use that much electricity each day!

- BK -

KA6UAI/R & WA6IPD/R AUTOPATCH CODE CHANGES: See below. Erik-KA6UAI also advises that the Encinitas autopatch needs to have about 10 seconds to reset before you re-dial.

If you have troubles with the autopatches, please contact a club officer by phone or come to the next meeting for personal instruction.

- BK -

Jerry Houser-WB6FMT has tested his VISTA autopatch on KA6UAI/R and everything seems to be working

normal and will be put on line February 1st. Remember that for ALL autopatches you need to say -

1) (your call) access autopatch
2) dial access code (see below) and a PL of 107.2Hz
3) listen for dial tone
4) then dial your phone number
5) clear patch with proper code
6) (your call) clear of patch with codes below.

(copy for car & home use) NEW

==========(ENCINITAS)==========

KA6UAI:147.13(+)(107.2)up*01-dwn#01)
(O)side,Cardi(f),(L)eucadia,(D)elMar
E(n)cinitas, (C)arlsbad, San(M)arcos
(R)ancho Santa Fe & (S)olana Beach
259d 411 431oc433o 434c 436n 438oc
439o 471m 481d 591s 632cn720oc721o
722o 729oc744m 753fn754 755d 756r
757o 759r 792d 793 853 931oc942n
943n 944n 966o 967o Emg. only 911

Non-emergency:

CA Highway Patrol (O'side)757-1675
Sheriff's department is 753-5591
AAA road service is 753-8917

==========(VISTA)==========

WB6FMT:147.13(+)(107.2)up*02-dwn#02)
(E)scondido, Carls(B)ad,(F)allbrook,
(O)ceanside, San(M)arcos, (V)ista,
Valley (C)enter
431ob432e 433o 434o 438o 439o 471m
480e 489e 591m 598v 630v 720o 721o
722o 723f 724v 726v 727v 728f 729o
731f 738e 739e 740e 741e 743e 744e
745e 746e 747e 749c 751c 754o 757o
758v 931ob940v 941v 945v 966o 967o

Non-emergency:

CA Highway Patrol (O'side)757-1675
Sheriff's assistance is 728-1113
AAA road service is 758-5570

==========(FALLBROOK)==========

WA6IPD:146.175+ (107.2)up*04-dwn#04)
(F)allbrook, (O)'side, Paum(a) Vly
(P)endleton,Valley (C)enter, (V)ista
430o 433o 434o 439o 598v 630v 720o
721o 722o 723f 724v 725p 726v 727v
728f 729o 742a 749c 757o 758v 940v
941v 945v 966o 967o & 911 Emg

Non-emergency:

CA Highway Patrol (O'side)757-1675
Sheriff's assistance is 728-1113
AAA road service is 758-5570

The KA6UAI patch is averaging per month 28 day calls, 20 evening calls, and 68 night calls with an average talking time of 90 seconds per call. We would like to keep it below 60 seconds per call!

- BK -

Karl Pagel-N6BVU of TASMA lists the following information about repeaters in Southern California:

Band	Open	Closed
6m	13	8
2m	181	81
220-222	3	98
222-2225	112	74
440-450	31	488
900 MHz	7	23
1.3 GHz	21	65
420-430	504 remote bases	
430-440	21 other systems	
2.3-2.4 Ghz	6 ATV repeaters	

- BK -

PATCH QUESTION: What if I hear someone using the patch without giving his call letters? ANSWER: Feel free to "dump" the call using YOUR call letters with the proper codes and report the incident to a PARC officer if a control operator is not present. The executive committee has also given permision for the dumping of non-member calls except for where the access code was dialed by a club member or in EMERGENCIES. At present, these comments apply ONLY to the KA6UAI/R repeater and NOT to the WA6IPD/R repeater.

- BK -

REMEMBER: 911 emergency calls need to indicate the call is via Ham Radio autopatch. The KA6UAI/R autopatchs will show up on their screen with Erik's address or with Jerry-WB6FMT's address. They are not interested in having the police pull up to their houses with "loaded guns!"

- BK -

The KA6UAI/R 10m link is now working only on receive until it gets fixed.

For Sale—

If you have an item for sale, bring it to the SALE TABLE at the club meetings, tagged with name, call and minimum price, if any. The Club takes 10% and you go home with $$. PARC takes no % on the ads below and they are FREE to club members. The month of first being run is indicated by date at the beginning of the ad. PLEASE tell us when the item(s) are sold. Deadline FORSAIL items is the 15th of the month addressed to the editor at his home address.

SWAPMEETS: Dennis-N6KI, price$; John-WB6IQS, VHF, UHF, Hardline; Kerry-N6IZW, Microwave; Paul-KB5MU, Pkt, Computers; and Bill-KB6MCU, ATV.

- BK -

(1-11)ARRL Repeater Directory 90-91 edition, unused $5; ARRL '90 Handbook, $20; Wilson 1402 6-chan 2w HT, charger, broken duckie (no modulation on xmit), $50; Heath SB-300 rcvr/w speaker & manual, $200: Mike-WB6CSH-leave msg 283-2447.

- BK -

(1-8)Heathkit SB-610 monitor scope, $75; National RBL-2 Low Frequency rcvr, $75: Dennis-N6KI-271-6079.

- BK -

(1-2)Ten Tec Argosy 5-50 watt xcvr with mike, pwr supply, manual: Reasonable Ron-WI6B-756-3133.

- BK -

(12-24)95'TOWER free standing, 4x20', 1x15', removed from Oceanside trailer park, want to recover cost of $815 to take down or best offer, can deliver, exec. cond.: Chad-N6ZPU-489-8811 Esc.

- BK -

(10-12)ICOM 02AT 2m HT w/BP-8 battery, leather case, DC chgr, spk mic/mic headset $250: Dennis-N6KI-271-6079.

- BK -

(12-3)PARC Vacuume tubes (checked) of all types: Larry-KC6PEN, 439-4109. Larry is replacing Dennis-N6KI's ad on fire bottles.

- BK -

WHY NOT SHARE THE HEALTH? San Diego Blood Bank A Regional Blood Center

(11-19)Kenwood TS-711A 2m xcvr, extras $795; Westcom 2m amp, 15in-90out $70; Janel 2m preamp $30; Drake WV-4 Wattmeter $50:; Ten-Tec model 238 2KW ant tuner $295: Duane-AA6EE-789-3674-eve.

- BK -

(11-19)'91 North American or International Callbook $23.99 or both $45.99; '91 ARRL Handbook $21.99; add 7% tax and $1.65 1st book & $.75 additional books; trade-ins '90 callbooks accepted: Check to Duane-AA6EE-16832-Whirlwind-Ramona-CA-92065-789-3674eve.

- BK -

(11-1)IBM Code tape for code practice sessions, free: Stan-W9FQN-749-0276.

- BK -

(10-20)ICOM-781 Xcvr; Telex Tail Twister Rotator $250; Sure 444 desk mic $25; Kenwood TS-711A 2M Xcvr; Westcom 2M 90W Amp; Janel 2M Preamp; Drake P/S; B&K mod 1460 10 MHz Oscilloscope $100; B&K mod 1400 scope calibrator $150; Heath mod 2232 component tracer $100: Duane-AA6EE-789-3674.

- BK -

(10-16)4250 watt electric start portable alternator fueled by gasoline or natural gas, 1984 model, 8hp Tecumseh, dual voltage 240/120 (17.7-35.4A). Minimal run time. Needs new rotor. Pd $650, sell $125: Mark-WA6DOC-945-1367.

- BK -

PALOMAR ARC: guy rope for antennas and masts from 260-770-1790 pounds breaking strength (4-8-12c/ft and 3/32-3/16-5/16" inches); HAM POSTAGE STAMP REPLICA PINS, $5/ea (great for Christmas gifts): Stan-W9FQN-749-0276.

Wanted—

(1-22)A group of members to buy some coax in bulk. Come to the Feb. mtg. and contact Mark-N6NNI.

- BK -

(1-11)ICOM 25A/35A/4SA/24AT accessories: Mike-WB6CSH-leave msg 283-2447.

- BK -

(1-10)January 1991 Issue of 73 Magazine (my picture is on page 66): Jo-KB6NMK-741-2560-Escondido.

- BK -

(1-5)Curtis LIL' Bugger Keyer, ICOM keyer module EX243, and ICOM IC-22A: Dennis-N6KI-271-6079.

- BK -

(1-2)2m mobile transciver: Ray-WA6THC-729-2001

- BK -

(1-2)Heathkit HW-8 QRP rig, will pay premium for quality wiring job: Reasonable Ron-W16B-756-3133.

-BK-

(12-11)a PARC member who can send computer code Friday evenings over 146.730. IBM's work fine for this.

- BK -

(11-16)Chuck-KG6CQ is interested in talking with someone who is using a Mack Plus computer on Packet: Carlsbad 720-9852.

- BK -

(9-7)Paul-KZ6X is looking for someone to help a technician with house calls. Time would be 8:30 to 5:30 on Wednesdays and Fridays. Call Paul at North Co. Service Center, 436-2900.

- BK -

(12-20)A few good men & women to help man the RACES station in San Marcos: Paul-N6ISC-727-8777.

D O N A T I O N S

If you don't know what to do with it, donate it to the club. Donated items are sometimes used in club projects or are taken to a swap meet for sale with the resulting $'s going into the club Equipment Fund which pays for equipment used at the repeater site or for Field Day.

M E M B E R S H I P I N F O

NEW: Stewart Miller, N6WSW, Carlsbad; Bruce Coy, WB6QLC, San Diego; Leonard Thompson, KB6MWH, Spring Valley; David Rosky, N6CQF, Leucadia; Larry Bishop, KC6PRH, Oceanside; Ray Spangler, WA6THC, Carlsbad; Jess Thieme, N6YRS, Vista; Dick Gearhart, KC6QBD, Oceanside, Danny Tharp, KC6PRW, Vista, and Terri Norman, KC6PPN, XYL of Matt-KC6NPM, Vista; Joseph Silveira-WA1CSO, Middletown, RI; Walter Smith-KC6OXZ, Valley Center.

RENEW: Larry-W6QCA (2yr); Aubry-W6ODG (not ODJ as listed last month); John-NW6W; Richard-AA6PN; Peter-N6YMC; Del-WV6Z; Hark-WB6WGT.

NEW CALL: N6YRT, Nicholas Uran, is now KK6TV.

CHANGED: WB6RWF, James Brown is now KK6FX.

SCOPE: Fred & Helen Anderson, SD; Bill Drimi-W6NAT, Caldwell, Idaho.

FCC UPDATE (12-1-90): (A)AA6ZU, (B)KK6TN, (C)-----, & (D)KC6PPF.

If ur adr label is PRC9101 (yr/mo), THIS IS UR LAST ISSUE! LX9503 means ur amateur license expires March of 1995. If u don't have an LXyymm, contact Jo-KB6NMK es get ur records up to date so u don't forget when to have ur license renewed. Use the evening traffic net to contact KB6NMK if u don't make meetings.

P A R C V E T E S T I N G

FCC LICENSE EXAMS in N.County are conducted by the PARC VE Team at the Joslyn Sr.Ctr, (behind City Hall) 111 Richmar Ave, San Marcos on the 2nd Sat. of the month at 1000 Hrs. Walk-ins are not accepted.

#6-JANUARY 12th: 16 applicants, 22 elements, & examinees passed 13 elements = 59% el pass rate. One was not tested because of time constraints.

Since August'90: 64 app, 99 el, 61 passed = 62% el pass rate.

NOVICE: Susan Blanford & Vincent Allen.

NOVICE->TECH: Joseph Bainum-NP, Joseph Banando-NP, Tom-KC6NXZ, Steve-KC6MIE, & Sean-NP.

TECH->GEN: Fred-KC6FSW & Larry-KC6PEN.

OTHER: Steward-N6WSW passed 3B &4A.

EXAM TEAM DEC: Duane-WB6R (code), Jack-KI6JM (reception), Jack-AA6UQ, Steve-N6RUB, Sam-W6YYv, Paul-KB5MU, and Rusty-AA6OM. Thanks for a job "well done."

Other SANDARC-VEC exams: 1st Sat.El Cajon, 3rd Normal Heights, 4th Chula Vista, & last Escondido ARS.

Applicants must send a SASE (Self-Addressed Stamped Envelope), a completed, signed FCC Form 610 (NO PHOTO-COPIES) and copies of license(s) and certificate(s) of successful completion, if any, to SANDARC-VEC. PO Box 2446, La Mesa, CA 92044 10 days B4 the test date. Bring ORIGINALS of licenses & certificates. Questions: call SANDARC 465-EXAM.

de A A 6 O M, Rusty Masse

G E N E R A L N E W S

The Palomar ARC provided communications for the Camp Pendelton Horse Endurance Ride where the horses were required to ride 25 and 50 mile courses with 86 horses (and ridders) participating. Jim-KF6QH organized the communications and was assisted by:

Joe-N6RVO (NC) . . . Jo-KB6NMK
Ellen-N6UWW . . . Olivia-WA6WTZ
Benton-KK6LX . . . John-KK6MS
Phil-KC6OEI Bill-WB6YLT
Carl-N6WLX Chuck-N6THG
Earl-N9KAB Mark-WA6DOC
Jim-KF6QH LLoyd-W6TFB

This is the first time in my memory that the repeater has been used officially "for horseing around."

- BK -

Roger-N6UUW reports a billboard on I-8 near 7th St. that says:

.--- -...

- BK -

BATTERY ALERT: don't mix alkaline and carbon-zinc batteries. The explosion could blow the end cap off a flashlight.

- BK -

The Queen Mary is back on the air after a year of inactivity (W6RO).

- BK -

Susan-N6QDB can hit the 146.850 repeater on Crestline from her 3rd floor room at Redlands University with her 1.5 watt HT which means she can talk to W9FQN, KA6FPS, and N6YZZ easily.

- BK -

John-WB6IQS, the club's resident repeater technical chairman attended the IEEE (Institute of Electrical and Electronic Engineers) conference in Washington, D.C. on January 16 and 17 and afterwards toured the Washington area. The conference discussed the FCC test procedures for radio emissions from computers, low power transmitters, receivers and security systems.

- BK -

The record for the most call signs so far is Dennis-N6KI:

WB2JDW (N.J.) EL2/N6KI (Liberia)
WA7FDJ (AZ) AB8AY (MARS Vietnam)
WB6LGI (CA) N6KI (CA)
8PGNY (Barbados) ((total = 7))

Mark-KC6CZO is second with:

KC6CZO-Ham WVR-9084-Marine
NNN0BRZ-Navy MARS KCP4538-CB

- BK -

THE AVERAGE CALIFORNIAN MOVES ABOUT 95 TIMES A WEEK! California definitely has its faults which is why there were over 5,000 earthquakes in the Golden State last year.

T H E B I G O N E I S
C O M I N G !

AROUND THE WORLD OR AROUND TOWN
FULL-SERVICE TRAVEL PLANNING

LOREEN WILHELMY (N6RAO)
(619) 756-2388

TRAVEL VISIONS • Encinitas, CA 92024

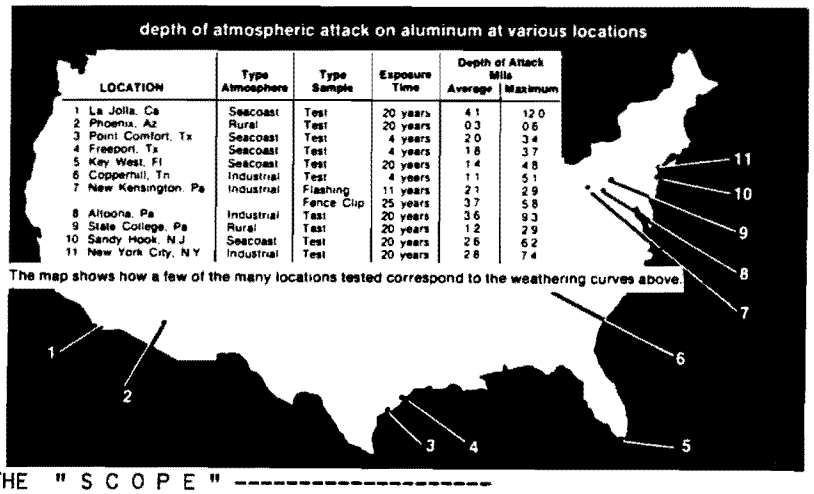

LOCATION	Type Atmosphere	Type Sample	Exposure Time	Depth of Attack Mils Average	Maximum
1 La Jolla, Ca	Seacoast	Test	20 years	4.1	12.0
2 Phoenix, Az	Rural	Test	20 years	0.3	0.6
3 Point Comfort, Tx	Seacoast	Test	4 years	2.0	3.4
4 Freeport, Tx	Seacoast	Test	4 years	1.8	3.7
5 Key West, Fl	Seacoast	Test	20 years	1.4	4.8
6 Coppernall, Tn	Industrial	Test	4 years	1.1	5.1
7 New Kensington, Pa	Industrial	Flashing	11 years	2.1	2.9
		Fence Clip	25 years	3.7	5.8
8 Altoona, Pa	Industrial	Test	20 years	3.6	9.3
9 State College, Pa	Rural	Test	20 years	1.2	2.9
10 Sandy Hook, N.J	Seacoast	Test	20 years	2.6	6.2
11 New York City, N.Y	Industrial	Test	20 years	2.8	7.4

---------- ADS HELP SUPPORT THE " S C O P E " ----------

N E T S
146.73 W E E K L Y E V E N T S

M->S 2000 S.D.Co Traffic Net
(except 1st Wed club meeting)
MON 2100 Microwave Net
TUE 2100 S.D. Pkt. Voice Net
WED 2100 Open, suggestions?
THU 2100 Ham Help Net
FRI 2100 Code Practice Net
SAT 1000 Sailboaters check-in
SUN 0830 ARES Net
SUN 1000 SSS (Sailboaters Net)
MON 1930 RACES Net on 147.195

The 2000Hr evening TRAFFIC NETS are training nets where net controls and net members receive training in the conducting of emergency nets by handeling routine traffic.

NET CONTROLS (NCs)need to remember that these are training nets and that they should not treat

new members harshly when a new member makes mistakes - and mistakes will be made. Traffic should be handed out by NCs with the idea of training as many net members as possible. Do not always give the traffic to the first one that checks into the net. You might keep a record of who has passed traffic. New net members who do not get the opportunity to pass traffic will soon drop out of the net. NCs should encourage new members to try handeling their net from time to time so that we have a reservoir of potential net controls (need to be a PARC member for NC).

NCs should remember that as we place more of the autopatches into use that traffic can possibly be delivered using an autopatch connection. NCs are not perfect and they from time to time commit errors which will need to be corrected.

New net members need to remember that these nets are training nets and that they will receive helpful suggestions from the net control from time to time.

Traffic handeling is a volunteer effort by volunteers and we will loose potential members if we are not diplomatic in our suggestions.

- BK -

Henry-WB0CQ and Larry-KC6PEN are pushing the simplex frequency of 146.535 for emergency and rag-chewing in the San Luis Rey valley. They claim to have 17 amateurs in the area and Henry monitors all day EVERY Friday. The club has never had a "club simplex" frequency and this frequency might be worth our consideration as a club frequency.

O T H E R N E T S

The RADIO AMATEUR COMMUNICATIONS EMERGENCY SERVICE (RACES) NET meets each Monday at 7:30pm on 147.195. Except for net nights, the RACES repeater uses a PL of 114.8 Hz but not for this net. Contact Frank-WB6HFE for info.

D I S C L A I M E R S

Meetings at LINCOLN MIDDLE SCHOOL are NOT a function of the Vista Unified School Dist. & are NOT sanctioned by the school Dist. Board of Trustees. See!

Unless specifically stated to be club policy, opinions and statements set forth herein do not necessarily represent club policy. Nor do they necessarily represent the opinions of the authors on other occasions or under different circumstances. The Editor further disclaims any knowledge of anything - real or imaginary. Verily.

You can copy anything out of the SCOPE you want as long as you give credit to THE PALOMAR AMATEUR RADIO CLUB, Inc., and author(s).

P O T P O U R R I

Whether you like it or not, NO CODE amateur licensing is here. It has been approved by the FCC, and I (AA6OM) will try to answer the questions you might have. The "magic" date is February 14, 1991, and there is only one license class affected, which is Technician. There will be no change to the Novice class, its privileges, or its testing procedures.

The requirements for the Technician class have merely dropped the five word per minute test. You must now pass just the element 2 (Novice written) and element 3A (Technician written). After passing these two tests, you will receive a Technician license. This license will give you all present Technician privileges above 30 MHz, so you will be able to operate on all of the "repeater type" bands; however, you will not have operating privileges below 30 MHz. If, after receiving your post February 14, 1991 Technician license, you wish to gain these HF privileges, you must pass the five wpm test at a VE test site. The VE's will issue you a CSCE (certificate of successful completion) which will authorize you to operate on these lower HF bands. The CSCE will be your only authorization to operate HF, (you will not receive any additional license), and it will be done on the honor system. Apparently they feel that if you are able to use code, you won't mind coming in to prove it at the testing site.

Questions in the two written tests (2, 3A) that must be passed are unchanged from the present tests. They will continue to test knowledge of operation and procedures in all bands. Of course with these changes, we will no longer require you to pass the code portion first, and we will allow you to take the two tests at different times and at different test sites. 73, Rusty Massie, AA6OM, PARC's VE Chairman.

- BK -

The January 1991 CA packet listing of network nodes, KA-style nodes, or digipeaters can be obtained from KJ6YT @ KB6GFT or from Robb Topolski-KJ6YT, 1525 Calle Sacramento #D, San Clemente, CA 92672, for $1.75. The list is 20 pages long! (Tnx Larry-WA6QCA) The FLYING SAMARITANS are looking for eye glasses for their Tecate Eye Clinic each month. If you have any old glasses or can locate a supply of them from friends, please bring them to the next meeting and give them to Nacho-W6HCD or Stan-W9FQN. They are also looking for any kind of doctor, nurse, pharmacist, audiologists, dentists, optomologists, hygienists, Spanish translators, etc. to help at Flying Samaritan Clinics in Testerazo, Tecate, Rancho Rosarito, San Felipe, and others too numerous to mention.

- BK -

If you have a business and would like to advertise in the SCOPE, contact Jo-KB6NMK or Stan-W9FQN. Business cards are $5/issue or $40/page. Ads do not need to be about amateur radio related items - as you have probably noticed.

JOIN THE ARRL: When joining or rejoining the ARRL, do it via the Club which will receive a modest stipend otherwise going to the ARRL. Make your check payable to the Club and get it, with your membership application, to our Trea$surer, Ron-W16B. NEW ARRL membership applications which include the PARC number (#1703), garner the Club $5 - and it doesn't cost you a fat farthing more!

- BK -

SWAPMEETS: Contact a club member about Saturday swap meets: Santee-1st, Cucamonga-2nd, Chatsworth-3rd, and TRW-last.

- BK -

- 73 W 9 F Q N -

The TS-32 ----->> Decoder/Encoder can be used to listen only to 146.730 AND can be used to generate a PL tone of 107.2Hz. Ask HRO about these units.

TS-32 Hookup
PL Decoder

Using a TS-32 PL Decoder with Speaker Level Audio. Volume Control will need to be turned up at least 40 percent.

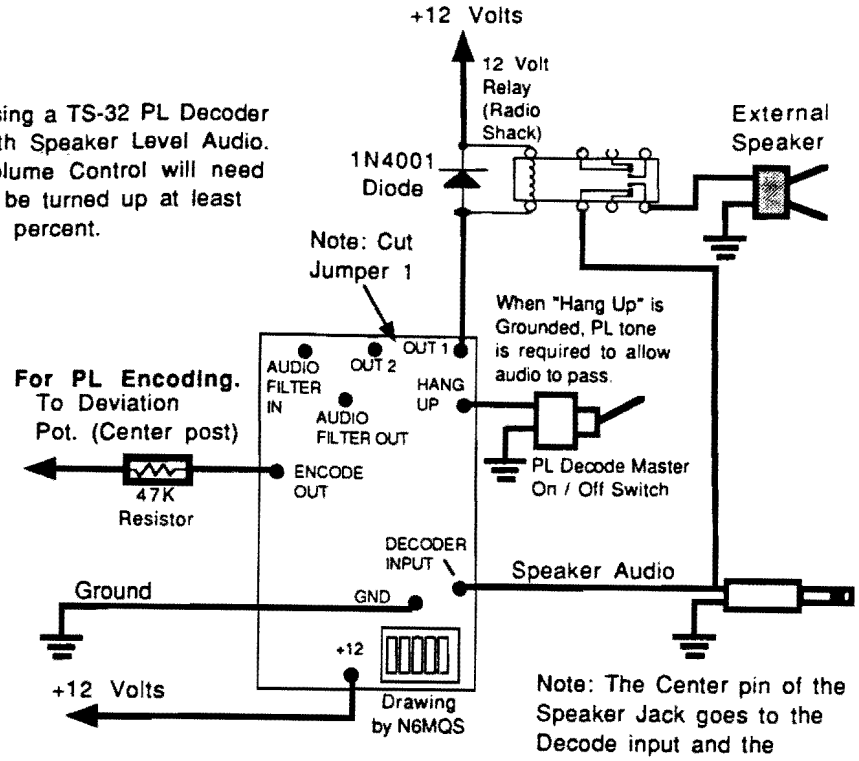

Note: The Center pin of the Speaker Jack goes to the Decode input and the Relay common post.

The original
R-X Noise Bridge

SWR AND POWER METER

The
Tuner-Tuner™

VLF CONVERTERS

Palomar Engineers
Phone: (619) 747-3343 · 1924-F West Mission Road
Escondido, CA 92025

"THE FISHING HOLE"
IN
OCEANSIDE SWAP MEET
NO3., ROW 14, SPACE 1&2..

PENN REELS
SAVE 20-33%
ROD & REEL COMBO

CALLING ALL "FISHING HAMS"
NATIONAL BRANDS AT DISCOUNT PRICES
FULL LINE OF TACKLE ITEMS.
LOWEST PRICES IN S.D. COUNTY
EXTRA 10% TO ALL 'HAMS' WEAR
YOUR HAM CALL TO RECEIVE.

SILSTAR MUSTAD
MASTER SHIMANO

W7HKI " LARRY" & W7HKL MAXINE

PARC members

SPECIAL OFFER

Feb 91

WORLDWIDE DISTRIBUTION

HAM RADIO OUTLET

LARGEST HAM OUTLET IN THE WORLD

For A HRO 72 Page Communication Equipment Catalog Send $1.00 to any HRO Store

NOW 10 STORE BUYING POWER

US TOWER CORPORATION

KENWOOD

rf concepts

ALL MAJOR BRAND ACCESSORIES

ICOM DAY FEBRUARY 9TH

HRO is in DENVER!

HAM RADIO OUTLET COAST TO COAST

NEW STORE!! Now in Denver!

HRO= Rapid deliveries from the store nearest you!

THIS GIVES YOU EVEN BETTER RESPONSE WITH LOW-LOW OUTLET PRICES & RAPID DELIVERIES COAST TO COAST.

...America's Best! TEN-TEC

GEOCHRON GLOBAL TIME INDICATOR

cushcraft CORPORATION

Advanced Electronic Applications

YAESU

AEA

All Major Brands in Stock Now!

FREE Shipment! most items over $100 UPS surface

Bob Ferrero W6RJ
President/Owner

Jim Rafferty N6RJ
VP - National Sales Manager

ANAHEIM, CA 92801
2620 W. La Palma
(714) 761-3033
(213) 860-2040
Between Disneyland & Knotts Berry Farm

ATLANTA, GA 30340
6071 Buford Highway
(404) 263-0700
Larry, WD4AGW, Mgr.
Doraville, 1 mi. north of I-285

BURLINGAME, CA 94010
999 Howard Av.
(415) 342-5757
Rich, WA9WYB, Mgr
5 mi. south of SFO on 101

NEW STORE!!
DENVER, CO 89231
8400 E. Iliff Ave., #9
(303) 745-7373
(800) 444-9478

OAKLAND, CA 94606
2210 Livingston St.
(415) 534-5757
Rich, WA9WYB, Mgr
I-880 at 23rd Ave. ramp

PHOENIX, AZ 85015
1702 W. Camelback Rd.
(602) 242-3515
Gary, WB7SLY, Mgr.
East of Highway 17

SALEM, NH 03079
224 N. Broadway
(603) 898-3750
(800) 444-0047
Paul, NW1U, Mgr.
Exit 1, I-93; 28 mi. no. of Boston

SAN DIEGO, CA 92123
5375 Kearny Villa Rd.
(619) 560-4900
Tom, KM6K, Mgr.
Highway 163 and Claremont Mesa Blvd.

VAN NUYS, CA 91411
6265 Sepulveda Blvd
(818) 988-2212
Al, K6YRA, Mgr
San Diego Fwy at Victory Blvd

WOODBRIDGE, VA 22191
14803 Build America Drive
(703) 643-1063
(800) 444-4799
Curtis, WB4KZL, Mgr
Exit 54, I-95, South to US 1

CALL TOLL FREE
NOW! Toll free in California !

WEST 1-800-854-6046
MID-WEST/COLORADO 1-800-444-9476
SOUTHEAST 1-800-444-7927
MID-ATLANTIC 1-800-444-4799
NEW ENGLAND 1-800-444-0047

(call routed to nearest store) Toll free incl. Hawaii. Local phone hours, 9:30 AM to 5:30 PM. AZ, CA, CO, GA, VA residents, add sales tax
WALK-IN HOURS: 10AM-5:30PM • CLOSED SUNDAYS
Prices, specifications, descriptions, subject to change without notice

P A R C A P P L I C A T I O N

Mail form with $$ to PARC, P. O. Box 1603, Vista, CA 92085-0530 or hand to Jo-KB6NMK, at club meetings. Dues (including SCOPE) are $12 a year plus $9 for each additional licensed family member. Dues are prorated for NEW members: Aug, Sep, Oct $12; Nov $9; Dec $8, Jan $7, Feb $6, Mar $5, Apr $4, May $3, Jun $2, Jul $1. Old members (1yr) $12. Consider paying for two or three years at a time. Call, name, and complete address are required. Telephone number may be un-unlisted in roster if requested. Other information requested below may be omitted if you feel uncomfortable providing it to the club. Complete and cut on slashed lion.

Call_____ Name_____

License Expires_____ Home Address_____

License Class_____ City_____ State_____ Zip_____ 1st 5 - +4

Old Calls _____ Home Phone # _____ Work Phone # _____

Year 1st licensed_____ Birth date_____ Thomas Brothers location, page #_____ (ie., pg 8L, D6) coord_____

Names & call of family members in PARC _____

ARRL____ RACES____ ARES____ Red Flag____ Blood donor____ Type____ Comments:_____

_____

_____

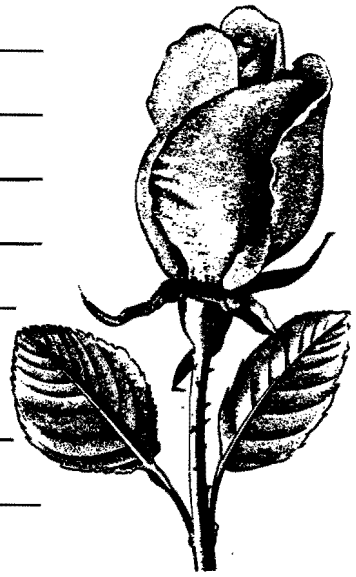

// slashed lion //

* *
* SCOPE,USPS 076530, published monthly by *
* the PALOMAR AMATEUR RADIO CLUB, INC *
* Post Office Box, 1603, Vista, CA 92085. *
* Subscription: $3.00 per year. *
* - *
* POSTMASTER: Send changes to: SCOPE, *
* P. O. Box 1603, Vista, CA. 92085-0530 *
* *

SCOPE

For Lovers Only

* * * * * * *
* 2nd Class *
* Postage *
* paid at *
* V I S T A *
* CA. 92083 *
* * * * * * *

SPOT LIGHT ON:
Next meeting, Autopatch changes, TS-32

ICOM MONTH is here!

SPECIAL PRICING ALL MONTH LONG!

ICOM DAYS at each store...

February is ICOM MONTH at HRO – with a special ICOM DAY at each of our stores:

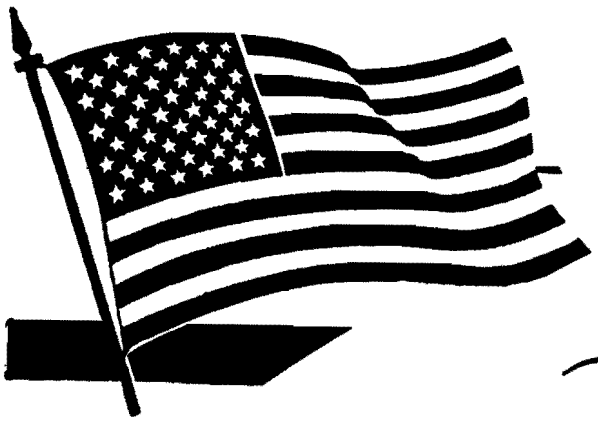

Happy Valentine's Day !